PTP01/02

minicam

Portable Storage Trolley

Eliminate health hazardous lifting, and time consuming carrying to your remote work site. Engineered to allow for the mobile operation of your Proteus inspection system in difficult to reach areas, such as inside buildings, or other situations a distance away from your vehicle.

The trolley securely holds everything you need to efficiently undertake your pipeline inspection; control unit, reel, battery pack and accessory case. Simply wheel the unit to your location, connect a camera and crawler, and you're up and running in minutes.

The added convenience of Minicam's unique Proteus Power Pack, means there's no need to rely on generator or mains power. The power pack enables pipeline inspection in the most remote locations with up to 5 hours* inspection time.

Please Note: Equipment shown on trolley NOT included with PTP01/02
**Battery life dependant on operating conditions..*

Compatibility

Technical Data

	PTP01	PTP02
Compatibility	RMP100/RMP200	RAP200
Dimensions	650 x 1150 x 750mm	650 x 1150 x 750mm
Weight	9.75kg	9.75kg

Portable Storage Trolley

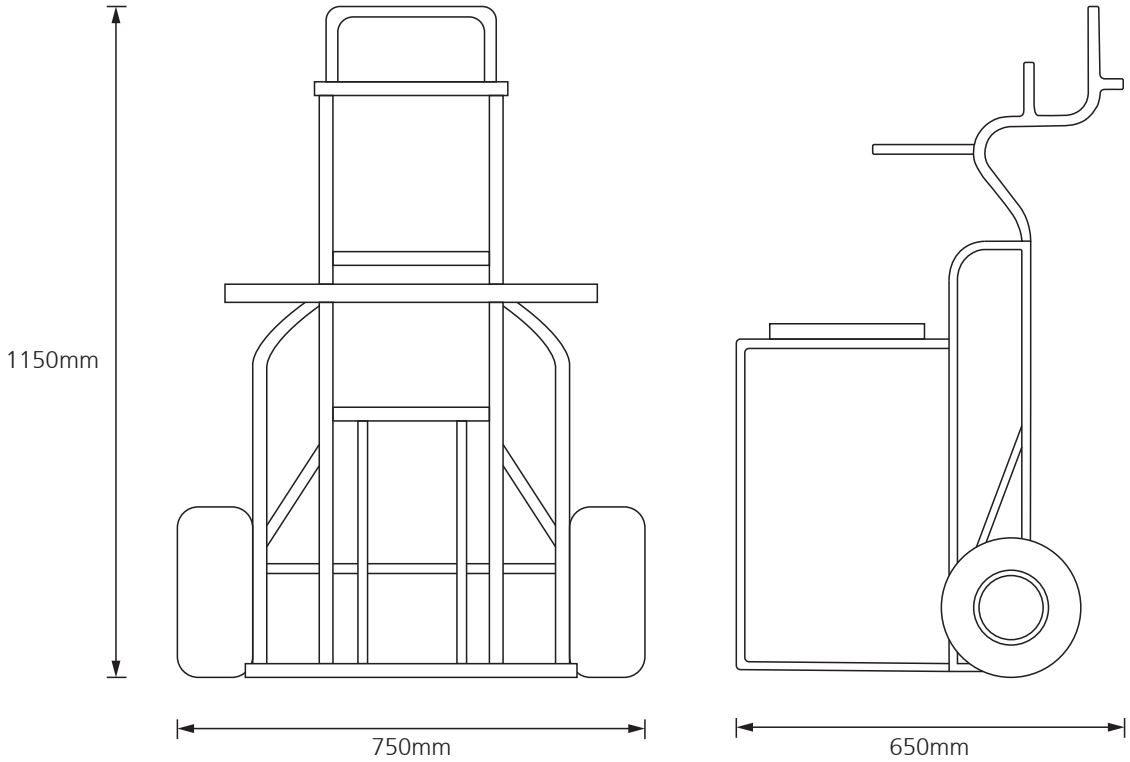

Battery Pack Holdert

No need to rely on vehicle or mains power. Minicam's unique Proteu sPower Pack enables pipleline inspections in the most remost locations with in excess of 5 hours of inspection time.

Fixing Plate

Trolley Without Equipment

112021 © 2022 Minicam

ISO 9001 REGISTERED FIRM

minicam

A Halma company

Minicam, Unit 4, Yew Tree Way, Stonecross Park, Golborne, Warrington, WA3 3JD
Tel: + 44 (0) 1942 270524 • Email: info@minicam.co.uk
www.minicamgroup.com